Cabrillo Reservoir Non-Potable Water Distribution System

Michael Baker INTERNATIONAL

Project Goals

1. Validate Sustainability & Quantity of the Non-potable Water Supply Source
2. Identify Required Treatment Needed to meet:
   - Title 22 Requirements (For Landscape Irrigation Use)
   - Drinking Water Quality Requirements
3. Comprehensive Structural Evaluation of Existing Cabrillo Reservoir
4. Quantify Non-Potable Demands of Potential Customers
5. Evaluate Alternative Pipeline Alignments
6. Evaluate Estimated Cost of Rehabilitation of Existing Facilities vs. Constructing New Facilities

GOAL: Determine the best approach and cost effective solution

Project Location

Project Team Responsibilities

- Michael Baker International
  - Structural – Reservoir Assessment
  - Conveyance Pipeline Alignment and Sizing Analysis
- Richard C. Slade & Associates LLC
  - Validate and Update Previous Groundwater Assessment
  - Evaluate Groundwater Supply Sustainability
- Carollo Engineers
  - Water Quality and Treatment Alternatives
  - Environmental Regulations

GOAL: Determine the best approach and cost effective solution

Cabrillo Reservoir Structural Assessment

- Constructed in 1918

  Retrofitted in 1927

- Evaluated for Current Seismic Code Conformance

- Cost Estimate for Retrofit/Replacement

Cabrillo Reservoir Plan

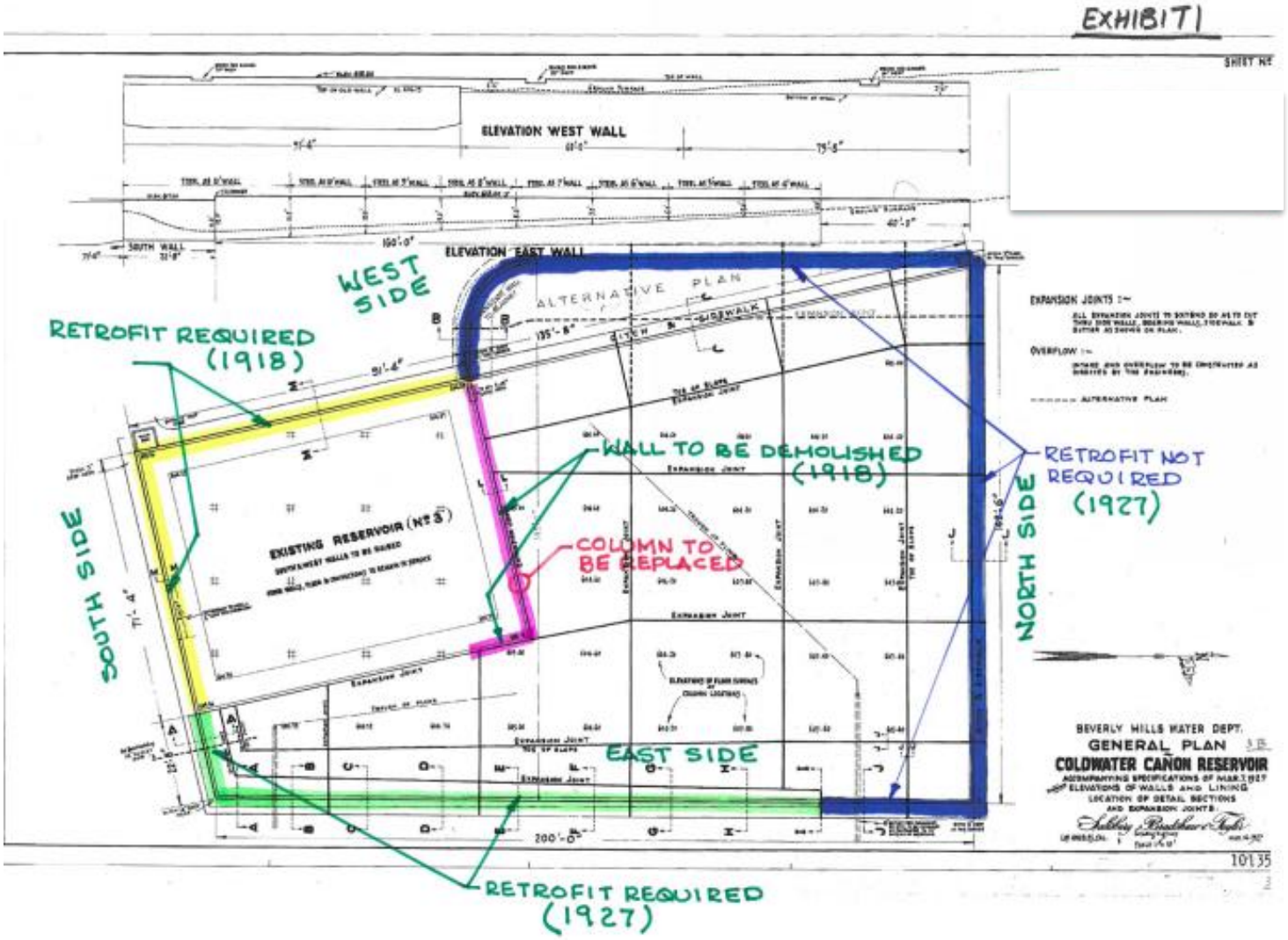

1918 Wall Evaluation

- Reservoir Empty – Inadequate Factor of Safety (FS) against sliding/overturning
- Reservoir Full – Okay With 10’ water + 2’ freeboard Under Static Condition
- Should not be left empty for extended period
- Structure susceptible to damage under a seismic event
- Recommendations for reservoir repair:
  - Retrofit Wall
  - Providing Sliding Key
  - Demolish Interior Wall

1927 Wall Evaluation

- Reservoir Empty – Inadequate FS against sliding under static and/or seismic loading
- Reservoir Full – Okay under all loading conditions
- Recommendation – Provide wall restraint against sliding

Alternative Buried Concrete Reservoir

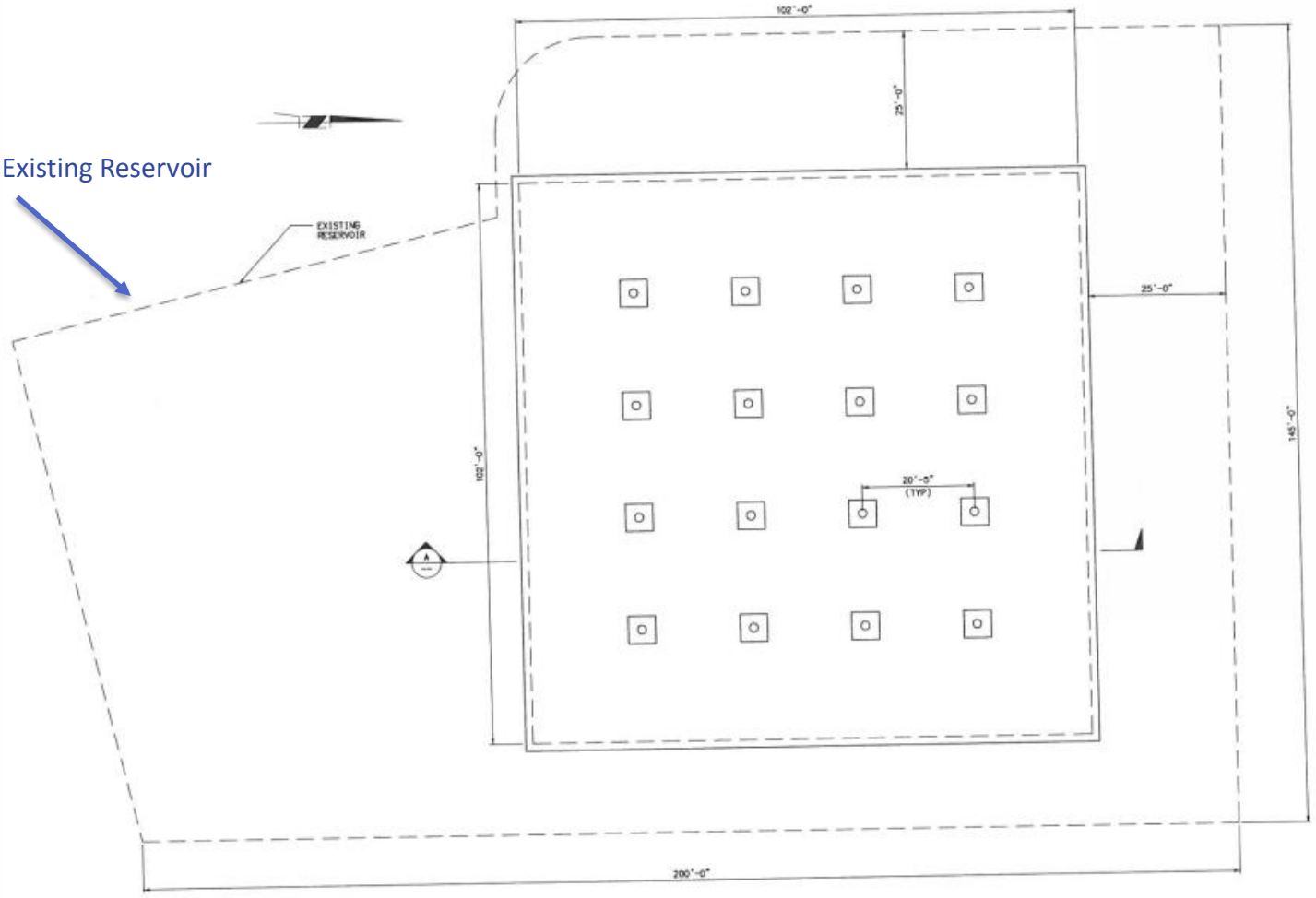

PROPOSED CABRILLO RECTANGULAR RESERVOIR REPLACEMENT- FOUNDATION/FLOOR PLAN
(812,440 GAL CAPACITY)

- 800,000 gallons storage for a five (5) day operating period

Structural Recommendation and Costs

- Retrofit Reservoir
  - Wall Retrofit Cost= $700,000
  - Future Column/Roof Replacement and Floor Repair Cost= $1,000,000
  - Floor and Roof may require repair/retrofit in near future

- Replace Reservoir (Req. 800,000 Gal Capacity)
  - New Rectangular Reservoir Cost= $1,400,000
  - Design Life 50+ years
  - Provides safe, reliable, durable, and maintenance free structure

Groundwater Supply Analysis

- Review of Previous Groundwater Studies
- Recent Site Visit
- Evaluate Sustainable Flow Available for Water Supply

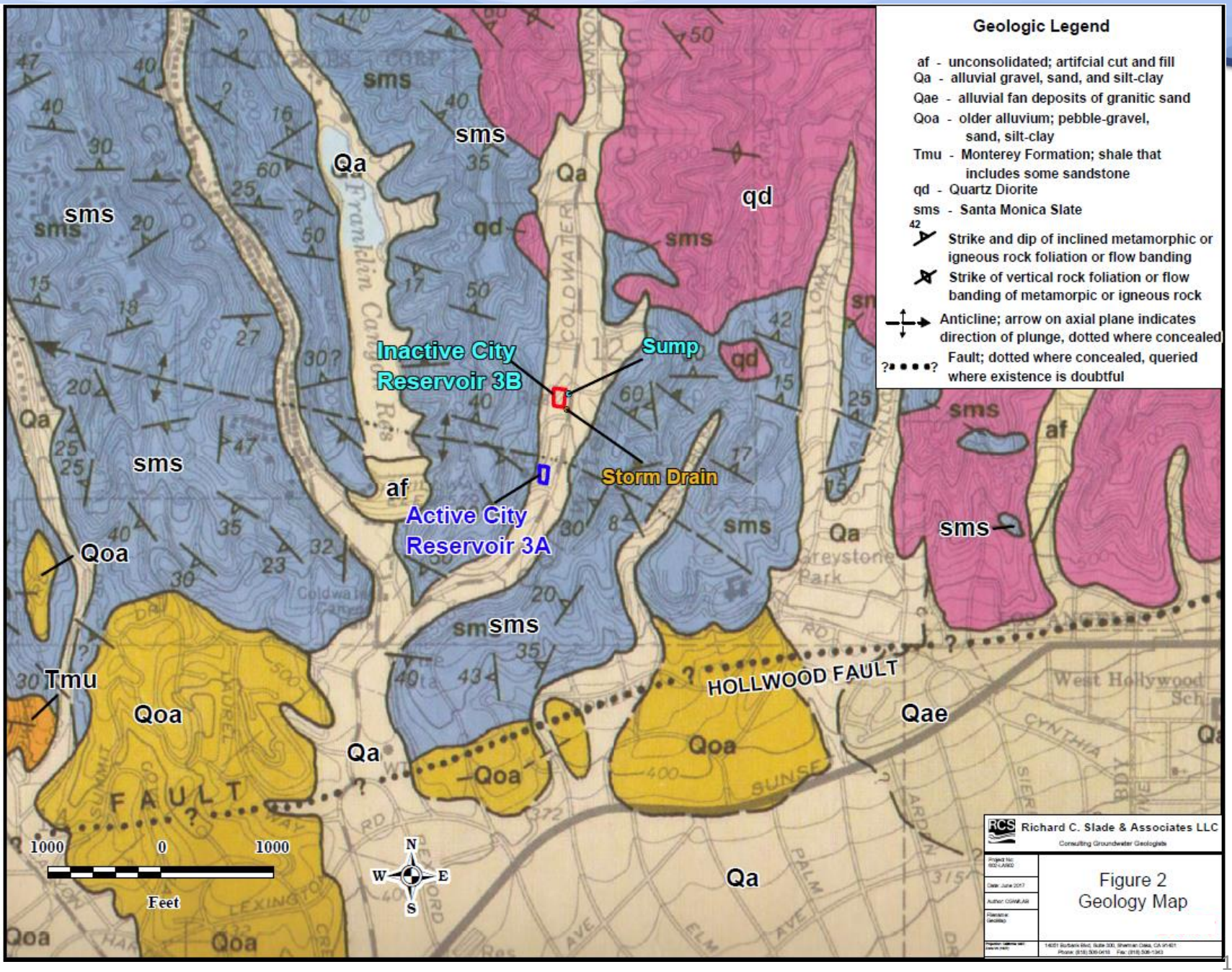
Geologic Legend
af - unconsolidated; artifcial cut and fill
Qa - alluvial gravel, sand, and silt-clay
Qae - alluvial fan deposits of granitic sand
Qoa - older alluvium; pebble-gravel, sand, silt-clay
Tmu - Monterey Formation; shale that includes some sandstone
qd - Quartz Diorite
sms - Santa Monica Slate
Strike and dip of inclined metamorphic or igneous rock foliation or flow banding
Strike of vertical rock foliation or flow banding of metamorpic or igneous rock
Anticline; arrow on axial plane indicates direction of plunge, dotted where concealed
Fault; dotted where concealed, queried where existence is doubtful
Inactive City Reservoir 3B
Sump
Storm Drain
Active City Reservoir 3A
HOLLWOOD FAULT
Franklin Canyon Res
Greystone Park
West Hollywood Sch
1000 0 1000
Feet
N
S
E
W
Richard C. Slade & Associates LLC
Consulting Groundwater Geologists
Figure 2
Geology Map

Key Findings

1. Prior site visits by RCS (2005, 2006, 2017)
2. Shallow groundwater entered bottom and sides of reservoir and was diverted to sump.
3. Reported flow rates from Sump
    - Roughly 200 gpm estimated in 2005
    - ±60 gpm in 2017 (Based on Flow Monitoring Data)
    - Rates/volumes will change seasonally, and year-to-year
4. Additional shallow groundwater at nearby private homes.

Other Key Findings, Continued

6. Preliminary Estimates of Groundwater Flow in Alluvium
    - Rainfall Recharge = ±45 to ±85 AFY (30 to 60 gpm, assuming constant flow, from recharge by rainfall & excess irrigation)
    - Underflow = 180 AF/yr (110 gpm, assuming constant flow, from Darcy's equation)
7. Drill 2 new shallow wells to augment sump flows
    - Non-potable supply
    - Hollow stem auger to ±50 ft
    - Drilling costs per well ≈ $35K
    - Conduct regular O&M of sump

Water Quality Sampling

- Title 22 Parameters: Turbidity, Coliform Bacteria, 126 Priority Pollutants (non-potable evaluation)
- DDW contaminants with MCLs (potable evaluation)
- Treatment Drivers: TDS, Hardness, Alkalinity
- Physical: pH, Conductivity, Odor, Color

Constituents of Concern

- Potable: TDS, Hardness, Turbidity, Coliform Bacteria
- Non-Potable (Irrigation): Turbidity, Coliform Bacteria, SAR, Boron, Chloride
- No significant scaling issues are anticipated for irrigation applications, including drip irrigation usage.

Regulatory Requirements for Irrigation

- Includes chlorine disinfection process following filtration that provides a **CT not less than 450 mg-min/L** at all times with **modal contact time of at least 90 minutes**
- Effluent does not exceed **2.2 MPN/100 mL**
- Effluent turbidity shall not exceed **2 NTU**

Treatment Process Flow

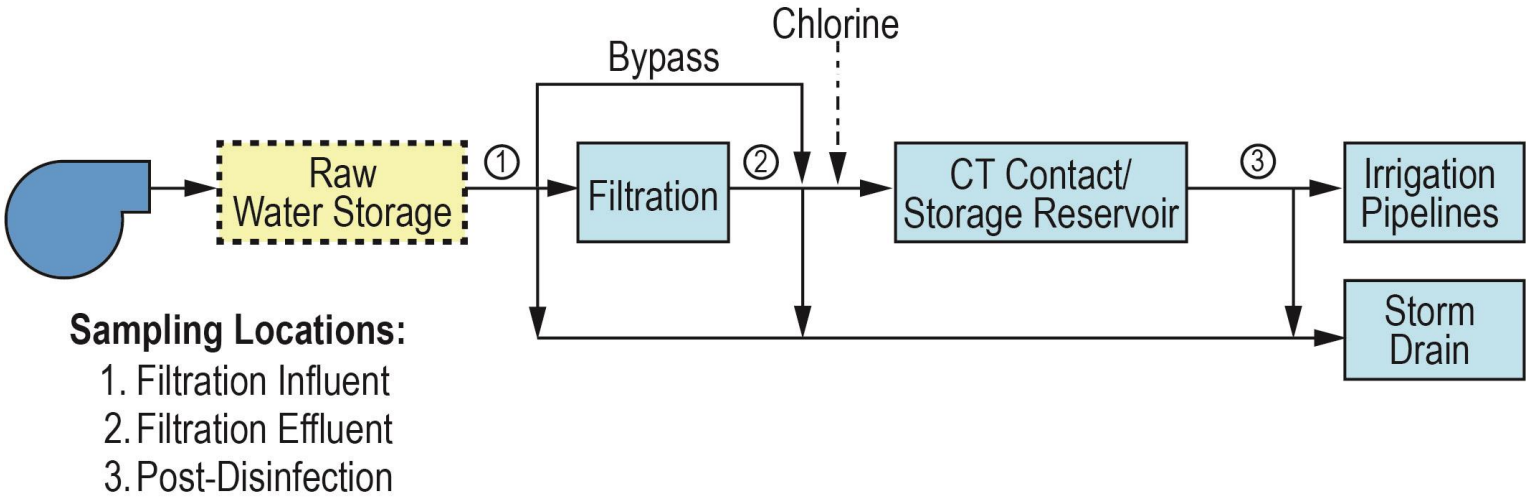

- Chlorine disinfection process
- Recommended: Cloth Filtration and Bulk Sodium Hypochlorite Storage and Feed System
- Total Cost = $580,000

Non-Potable Water Pipelines

- Goal
  - Evaluate Three (3) Transmission Main Alignments
  - Identified Users and Demand
- Demand = 85,700 gpd
- Supply = ±60 gpm = ±86,400 gpd

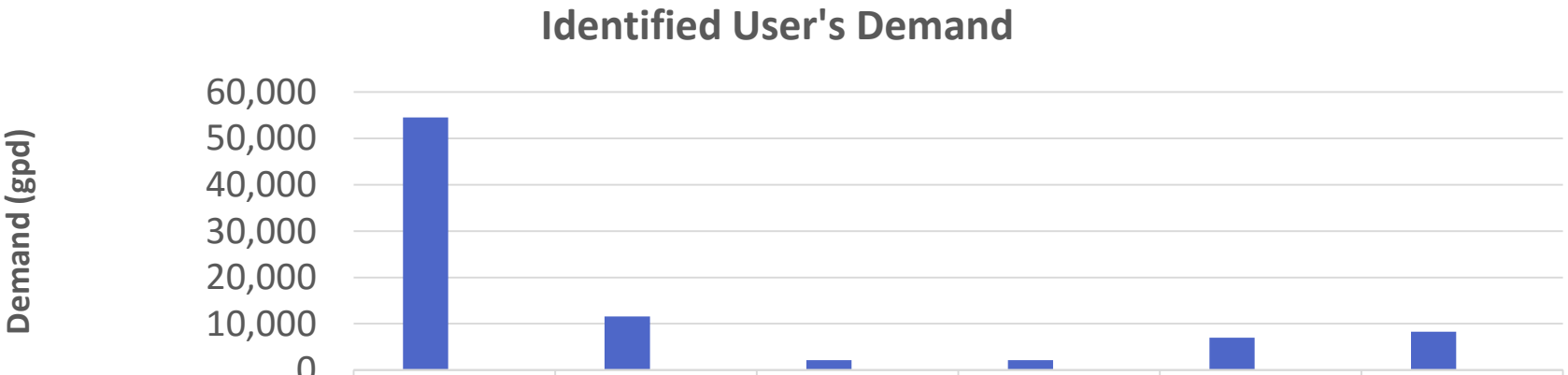

	Beverly Gardens	Coldwater Park	Maltz Mini Park	Hawthorne School	Sunset Median	Will Rogers Park
Average (2013-2016)	54,514	11,599	2,172	2,172	6,999	8,276
Percentage	64%	14%	3%	3%	8%	10%

Pros and Cons Summary

Alignment 1 – Cabrillo Dr to Rexford Dr

- **Pros:** Has the least traffic, least costly option by 7.3%
- **Cons:** Large/moderate trees, Highly congested with water mains, most special crossings and largest crossing, no benefit from new pavement, not near Will Rodgers Park (high demand user)

Alignment 2 – Cabrillo Dr to Crescent Dr (Recommended)

- **Pros:** Avoids large potable water mains, benefit from new pavement, near all high demand users
- **Cons:** Large/moderate trees, impacts the cycling route through N Crescent Dr

Alignment 3 – Cabrillo Dr to Canon Dr

- **Pros:** Avoids more large trees, avoids large potable water mains, benefits from new pavement, near all high demand users
- **Cons:** Most traffic, high-pressure gas line

Total Project Cost Summary

ITEM	COST ESTIMATE
1. New Reservoir	$1,400,000
2. Water Supply	$70,000
3. Water Treatment	$580,000
4. Pipelines	
Transmission Mains	$3,801,000
Distribution Mains	$1,764,000
SUBTOTAL	**$7,615,000**
20% Contingency	$1,523,000
15% Engineering/Administrative	$1,143,000
TOTAL COST ESTIMATE	**$10,281,000**

Summary of Item Deliverables

1. New 800,000 Gallon Reservoir
2. Two New Wells
3. Cloth Filtration, Disinfection, and Piping / Appurtenances
4. Conveyance Pipeline from Reservoir to All City Identified Users

Total Water Unit Cost

ITEM	ANNUAL COST
1. Total Capital Cost [1]	$10,281,000
2. Annual Capital Costs [2]	$594,551
3. Annual O&M Costs	
Treatment Plant O&M Costs [3]	$15,000
Energy Costs [4]	$2,577
4. Water Production (AFY)	96
5. Capital Unit Cost ($/AF)	$6,193
6. O&M Unit Cost ($/AF)	$183
Total Unit Cost ($/AF)	**$6,376**

[1] Based on capital cost estimate of final recommended project with 3.0% inflation rate
[2] Based on 30-year loan at 4.0% rate.
[3] Includes O&M costs for chemicals, consumables, labor, and maintenance.
[4] Based on 75% utilization and LADWP rate schedule

Recommended Project Summary

- Non-potable water use for landscape irrigation
- Drill two new wells to augment sump flows
- Install cloth filtration and chlorine disinfection to meet water quality regulations
- Construct new 800,000 gallon reservoir
- Construct non-potable transmission and distribution pipelines (Alignment 2)

Overall Project Layout

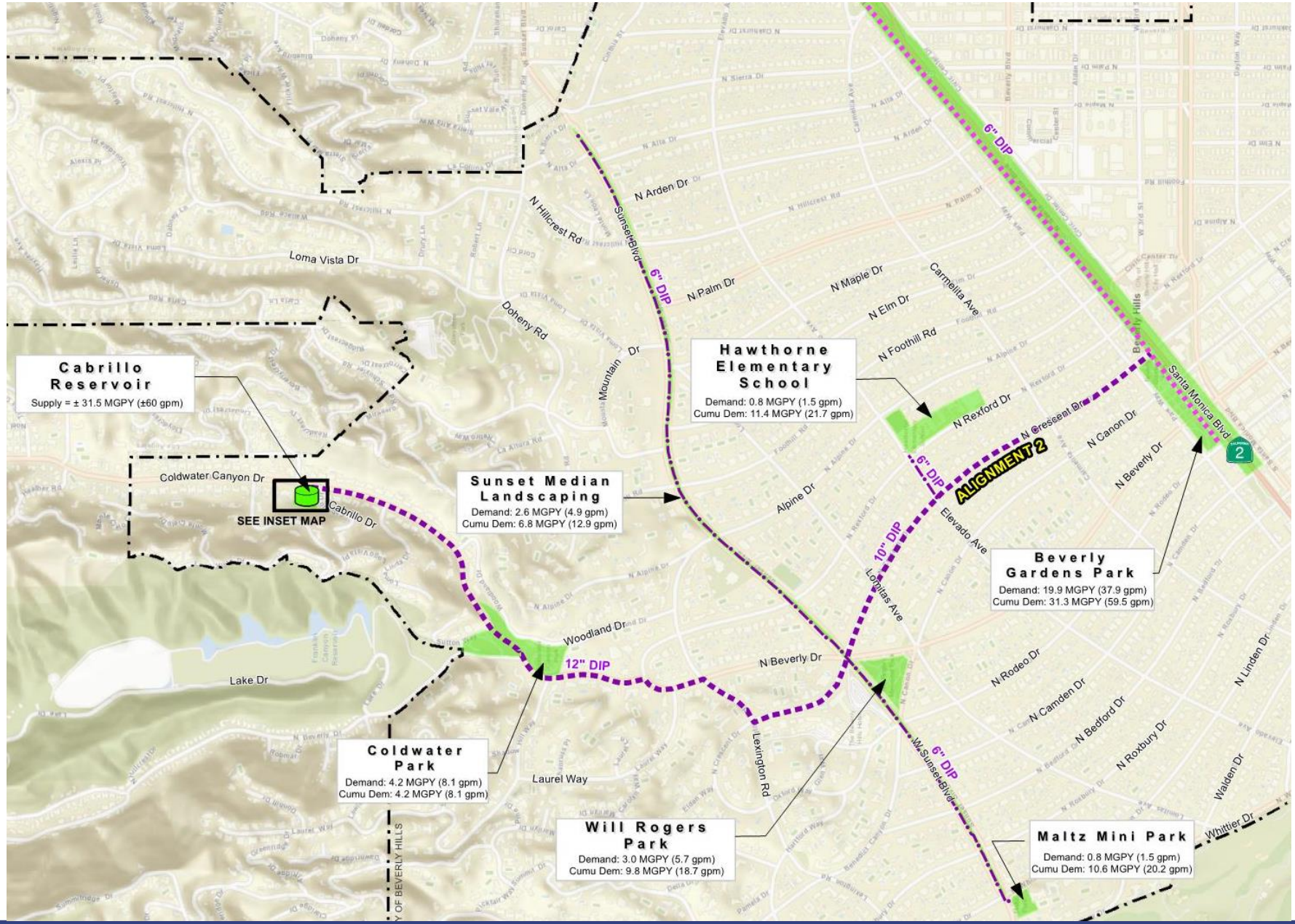

Questions ?

1918 Wall Retrofit Design Concept

- Drill and dowel retrofit wall/footing with sliding key from outside

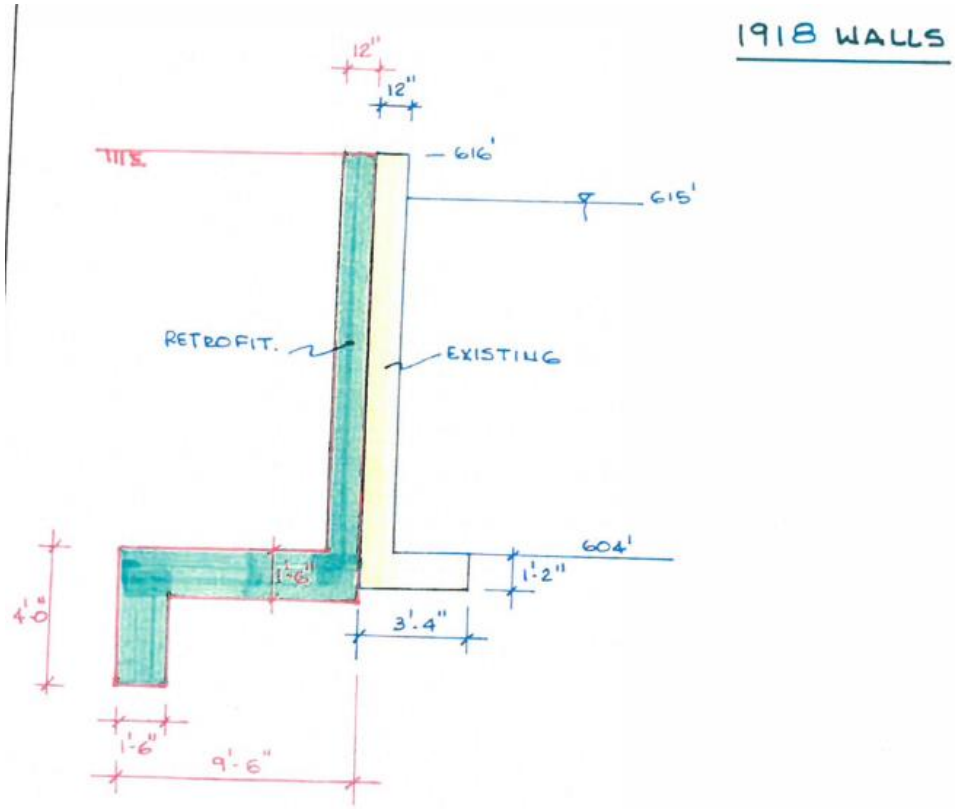

1927 Wall Retrofit Design Concept

- Install tieback from inside the reservoir

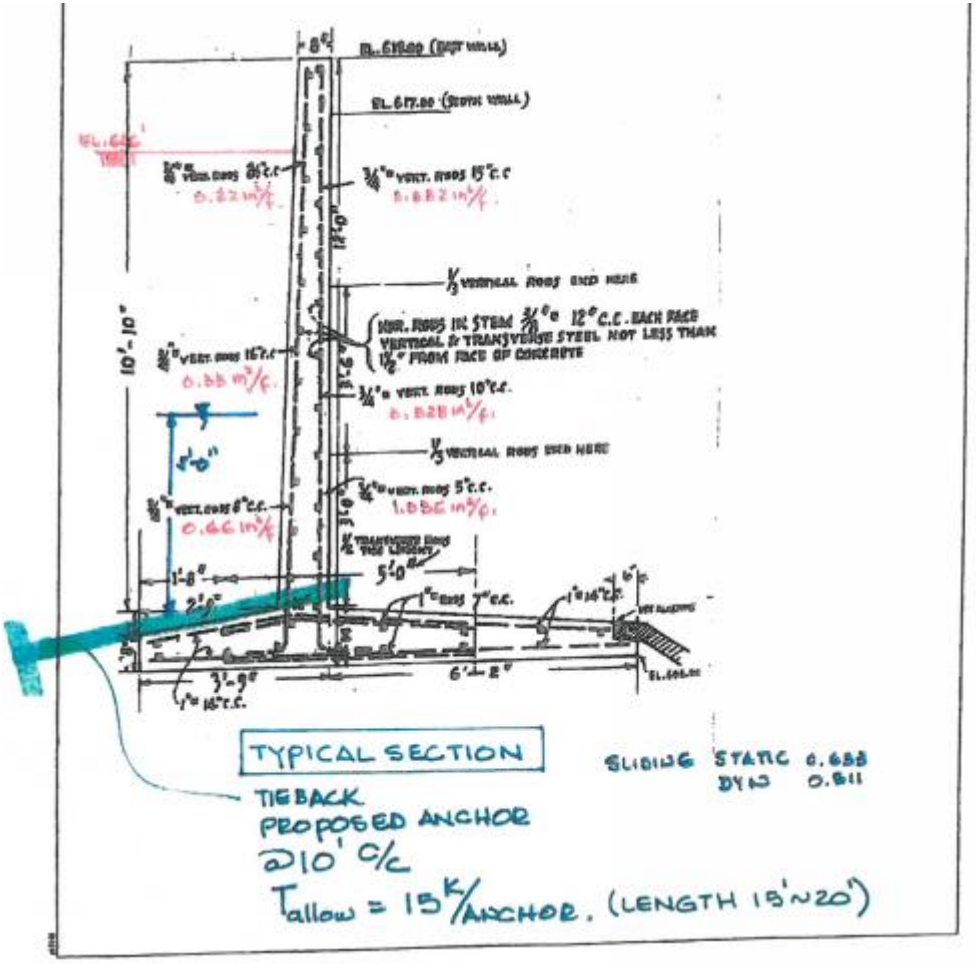

Section View Concrete Reservoir

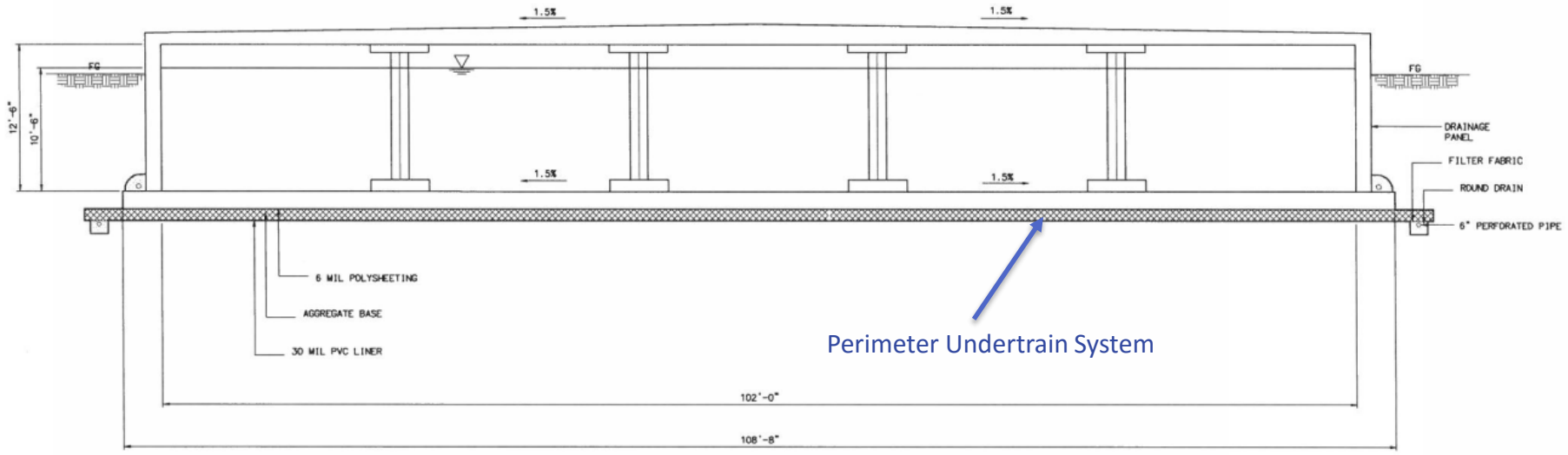

PROPOSED CABRILLO RECTANGULAR RESERVOIR REPLACEMENT- SECTION
(812,440 GAL CAPACITY)

Detected Parameters

Cabrillo Reservoir Water Quality (Detect only)					
Parameter	Method	Units	Reporting Limit	Value	Water Quality Standard
Aluminum	EPA 200.7	mg/L	0.0500	0.0504	1[2] and 0.05 to 2[3]
Boron[1]	EPA 200.7	mg/L	0.0500	0.0749	
Calcium[1]	EPA 200.7	mg/L	10.0	118	
Iron	EPA 200.7	mg/L	0.0200	0.215	0.3[3]
Magnesium[1]	EPA 200.7	mg/L	10.0	44.4	
Potassium[1]	EPA 200.7	mg/L	0.500	2.66	
Sodium[1]	EPA 200.7	mg/L	20.0	29.5	
Barium	EPA 200.8	µg/L	1.00	84.5	1000[2]
Chromium	EPA 200.8	µg/L	1.00	1.07	50[2]
Copper	EPA 200.8	µg/L	1.00	2.75	1300[2] and 1000[3]
Manganese	EPA 200.8	µg/L	1.00	4.86	50[3]
Molybdenum	EPA 200.8	µg/L	1.00	3.08	
Vanadium	EPA 200.8	µg/L	1.00	2.26	
Chloride	EPA 300.0	mg/L	2.50	105	250[3]
Fluoride	EPA 300.0	mg/L	0.100	0.345	2[2][3]
Nitrate (as N)	EPA 300.0	mg/L	0.200	2.05	10[2]
Sulfate	EPA 300.0	mg/L	12.5	107	250[3]
Chloroform	EPA 524.2	µg/L	0.500	0.932	80 (Total THMs)[2]
Total Alkalinity (as $CaCO_3$)	SM 2320 B	mg/L	5.00	307	
Bicarbonate	SM 2320 B	mg/L	5.00	307	
Total Hardness (as $CaCO_3$)	SM 2340 C	mg/L	4.00	470	
Specific Conductivity	SM 2510 B	µmho/cm	2.00	1030	
Total Dissolved Solids	SM 2540 C	mg/L	50.0	632	500[3]

Notes:
(1) Two samples analyzed. Average is shown.
(2) Maximum Contaminant Level (MCL)
(3) Secondary Maximum Contaminant Level (SMCL)

Turbidity & Coliform Bacteria

Cabrillo Reservoir Water Turbidity (March to April 2017)	
Minimum	< 0.100 NTU
Maximum	26 NTU
Average	4.13 NTU
Standard Deviation	8.36 NTU
Count	9

Cabrillo Reservoir Water Coliform Bacteria Analysis (March to April 2017)		
Date	Total Coliform Bacteria	*E. coli*
03/23/2017 (inlet)	Present	Absent
03/23/2017 (outlet)	Present	Absent
03/28/2017	Present	Absent
03/30/2017	Absent	Absent
04/04/2017	Absent	Absent
04/06/2017	Present	Absent
04/11/2017	Present	Absent
04/13/2017	Present	Absent
04/18/2017	Present	Absent
04/20/2017	Present	Absent

Preliminary Cost Estimate For Water Treatment System

Preliminary Construction Cost Estimate	
Component Description	**Cost**
Cloth Filtration System	$149,000
Chlorine Storage and Feed (including SBS dechlorination)	$23,000
Piping and Instrumentation	$109,000
Construction Work	$79,000
Disinfection Building	$93,000
Electrical (20% of Total Direct Cost)	$127,000
Total Direct Cost	**$580,000**

Alignment 1 – Cabrillo Dr to Rexford Dr

Intersection	Alignment 1 Crossings
Coldwater Canyon Dr and Cabrillo	72" SD
Coldwater Canyon Dr and N Beverly Dr	84" SD and 77" SD
N Beverly Dr and Shadow Hill	39" SD
N Rexford Dr and Lexington Rd	156" SD
N Rexford Dr and Sunset Blvd	Two 20" DW
N Rexford Dr and Lomitas Ave	24" SD and 24" DW
N Rexford Dr and Elevado Ave	16" DW
N Rexford Dr and Santa Monica Blvd	59" SD

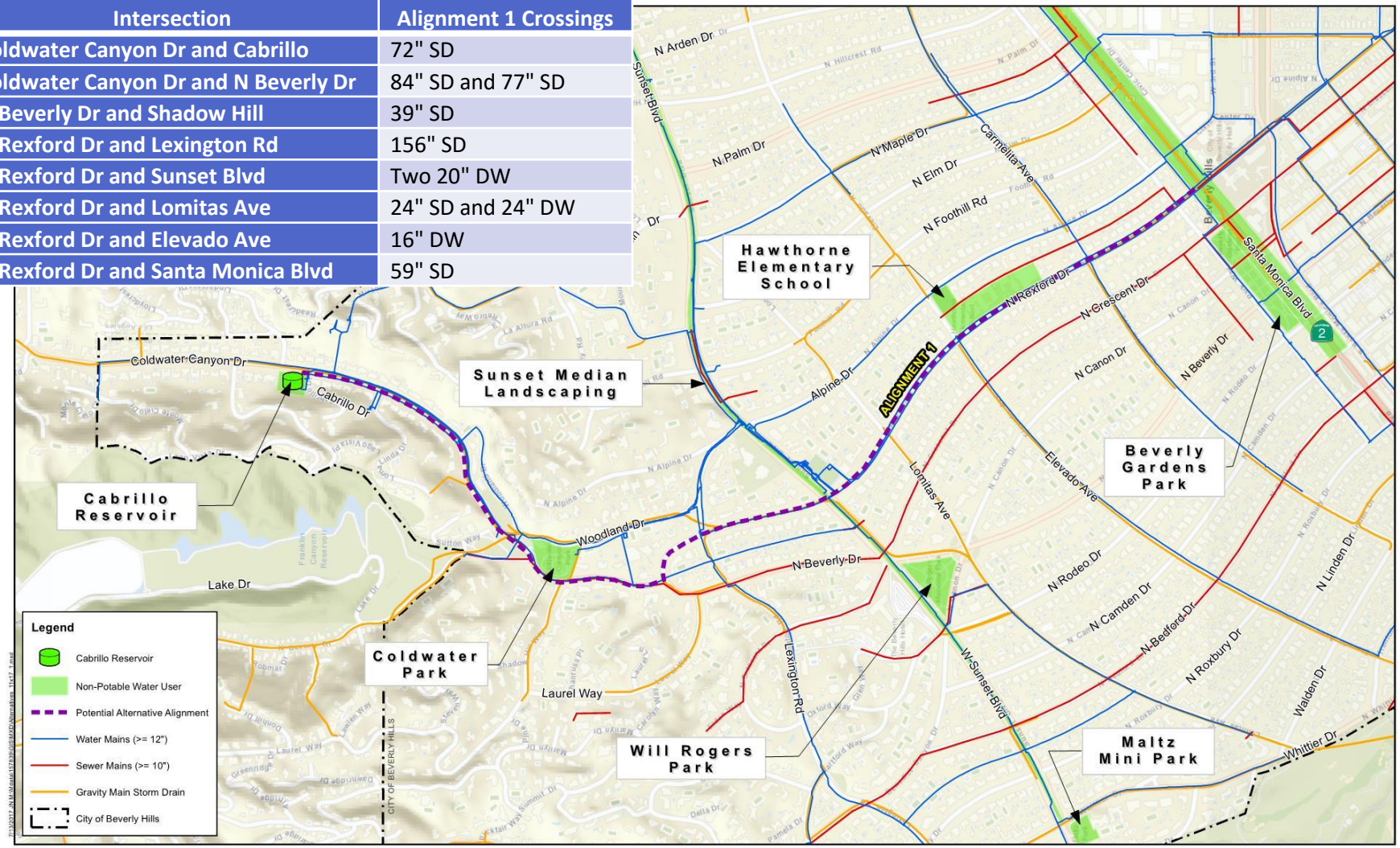

Alignment 1- Coldwater Canyon Drive to Rexford Drive

Exhibit 1

Alignment 2 – Cabrillo Dr to Crescent Dr

Intersection	Alignment 2 Crossings
Coldwater Canyon Dr and Cabrillo	72" SD
Coldwater Canyon Dr and N Beverly Dr	84" SD and 77" SD
N Beverly Dr and Shadow Hill	39" SD
N Beverly Dr and Laurel Way	36" SD
N Beverly Dr and Lexington Rd	24" SD
N Crescent Dr and Sunset Blvd	144" SD
N Crescent Dr and Lomitas Ave	27" SD
N Crescent Dr and Elevado Ave	36" SD
N Crescent Dr and Carmelita Ave	33"SD

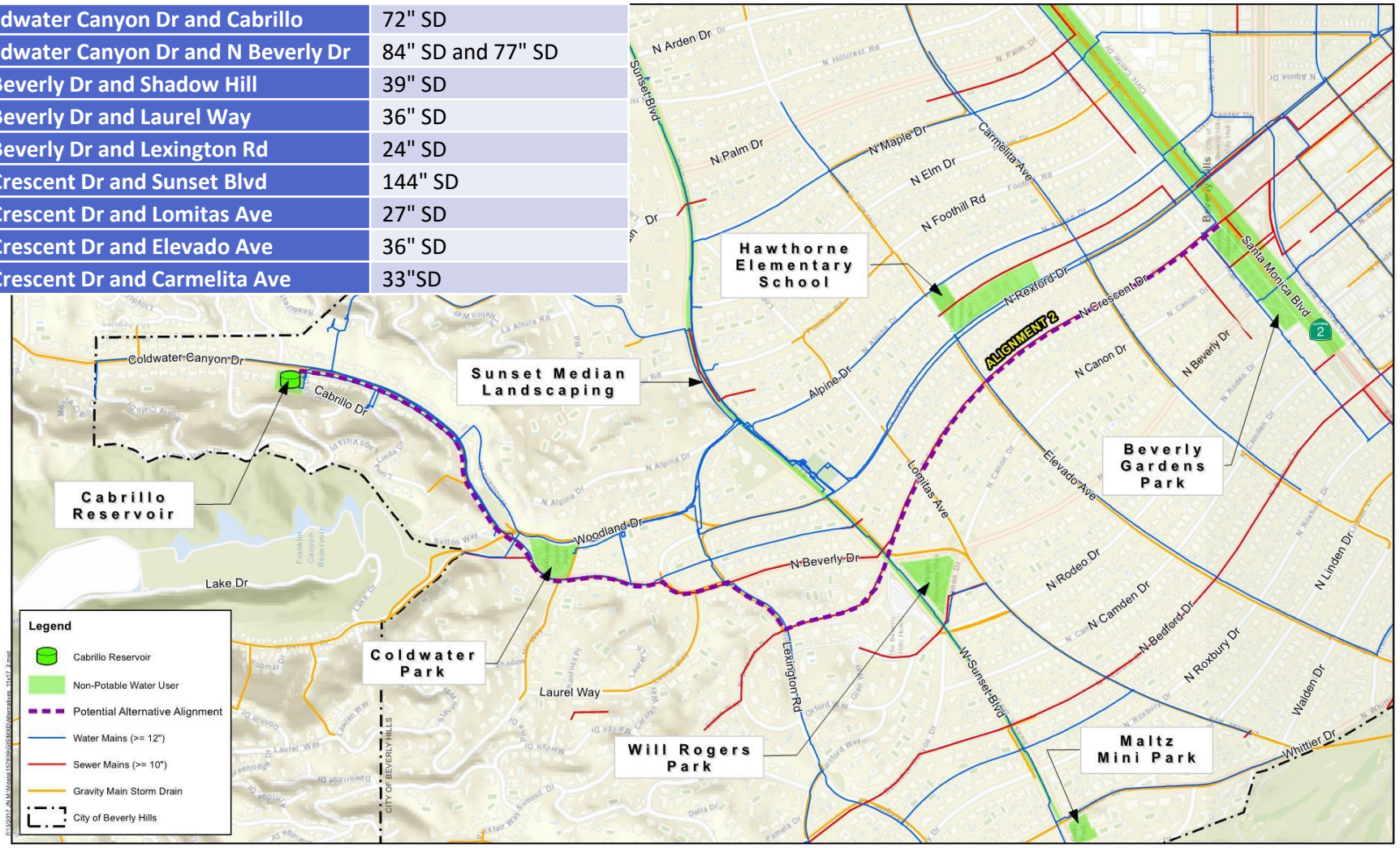

Michael Baker INTERNATIONAL

Source: City of Beverly Hills, County of Los Angeles, ESRI

Alignment 2- Coldwater Canyon Drive to Crescent Drive

Exhibit 2

Alignment 3 – Cabrillo Dr to Canon Dr

Intersection	Alignment 3 Crossings
Coldwater Canyon Dr and Cabrillo	72" SD
Coldwater Canyon Dr and N Beverly Dr	84" SD and 77" SD
N Beverly Dr and Shadow Hill	39" SD
N Beverly Dr and Laurel Way	36" SD
N Beverly Dr and Lexington Rd	24" SD
N Canon Dr and Lomitas Ave	30" SD and 138" SD
N Canon Dr and Elevado Ave	42" SD
N Canon Dr and Carmelita Ave	30" SD

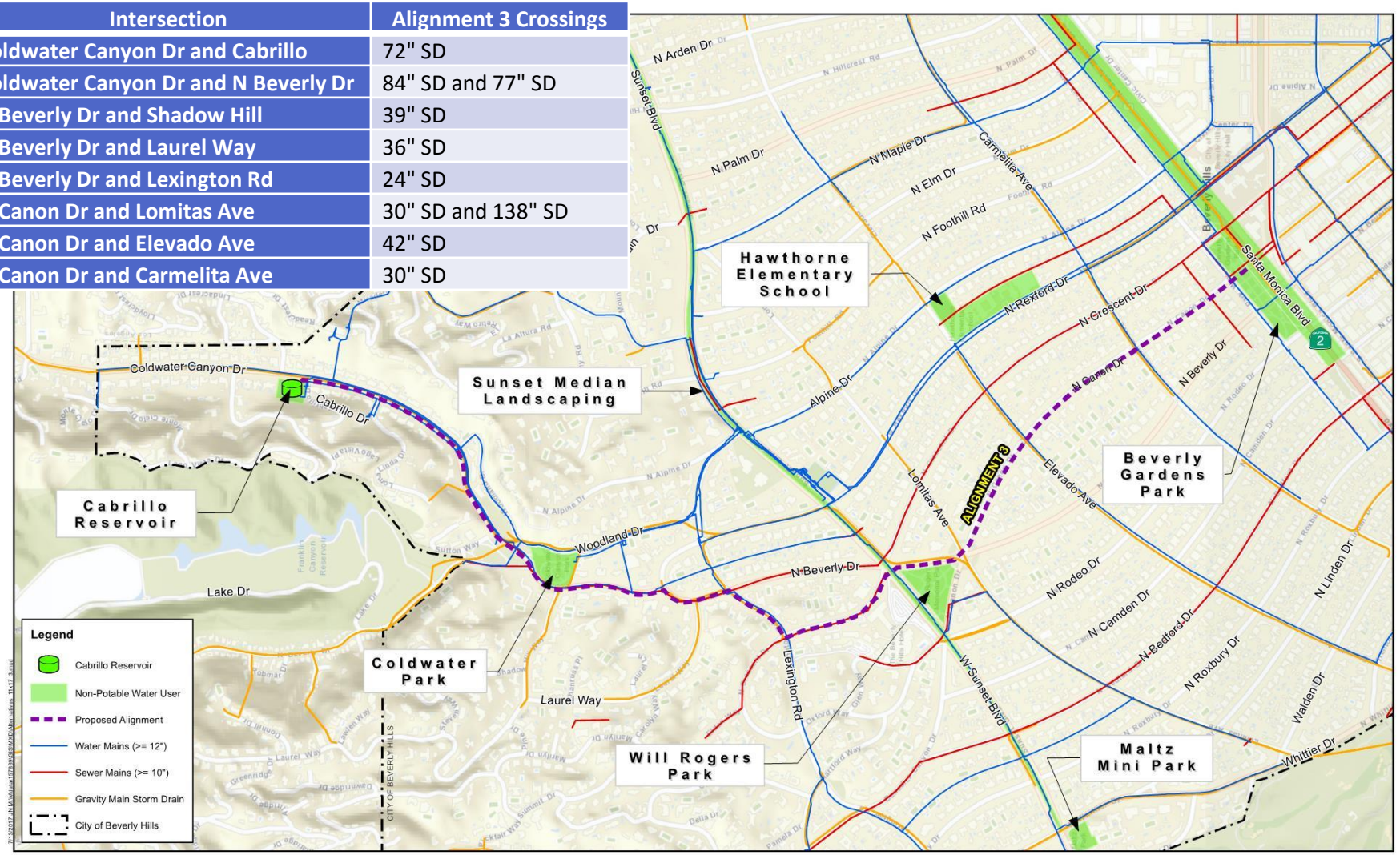

Michael Baker INTERNATIONAL

0 800 1600 Feet

Source: City of Beverly Hills, County of Los Angeles, ESRI

Alignment 3- Coldwater Canyon Drive to Canon Drive

Exhibit 3

Pipeline Alternatives – Estimated Costs

Item	Item Description	Qty	Unit	Unit Cost	Item Cost
	Alignment 1 – Cabrillo Dr to Rexford Dr				
1	6″ DI Class 52 Distribution Main	9,200	LF	$ 180.00	$ 1,656,000
2	10" DI Class 52 Transmission Main	4,500	LF	$ 300.00	$ 1,350,000
3	12" DI Class 52 Transmission Main	6,050	LF	$ 360.00	$ 2,178,000
				Total Cost	**$ 5,184,000**
	Alignment 2 – Cabrillo Dr to Crescent Dr (Recommended)				
1	6″ DI Class 52 Distribution Main	9,800	LF	$ 180.00	$ 1,764,000
2	10" DI Class 52 Transmission Main	4,570	LF	$ 300.00	$ 1,371,000
3	12" DI Class 52 Transmission Main	6,750	LF	$ 360.00	$ 2,430,000
				Total Cost	**$ 5,565,000**
	Alignment 3 – Cabrillo Dr to Canon Dr				
1	6″ DI Class 52 Distribution Main	10,300	LF	$ 180.00	$ 1,854,000
2	10" DI Class 52 Transmission Main	4,475	LF	$ 300.00	$ 1,343,000
3	12" DI Class 52 Transmission Main	6,820	LF	$ 360.00	$ 2,456,000
				Total Cost	**$ 5,653,000**